POLYCLIP
AG.PLASTICS

INSTALLATION INSTRUCTIONS

Polyclip® 40 mm 3P / 5PX / 9P

Dear customer,

Congratulations on your purchase of Polyclip® front panels. You will notice the simplicity of its installation and you will be astonished at its multiple application possibilities.

GENERAL

Polyclip® is a modular front panel system for vertical use or for applications with important inclination (75° to 90°).
The translucent polycarbonate clip panels are mounted in an aluminium frame.

PARTS

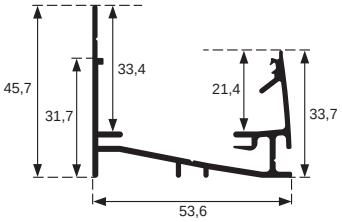

Sill FB

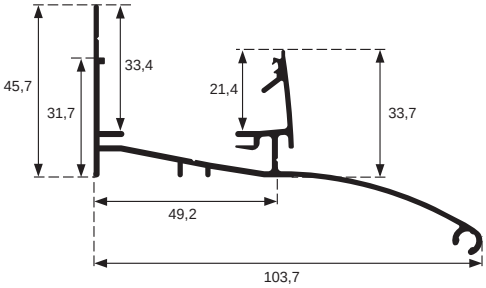

Sill profile with dripping edge FBB

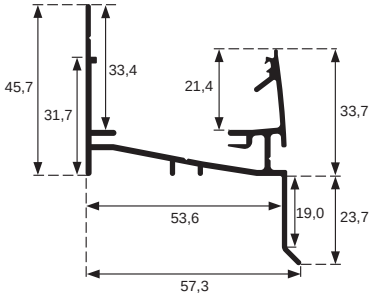

Sill profile with rabbet FBL

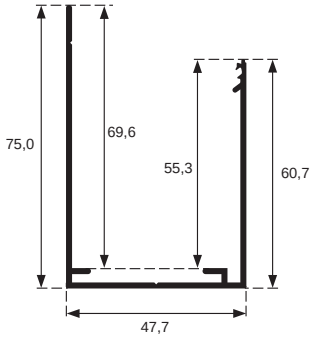

Top and side profile FT

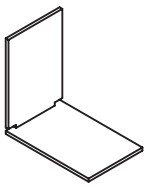

Angle connector bottom LB

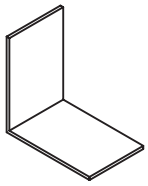

Angle connector top TL

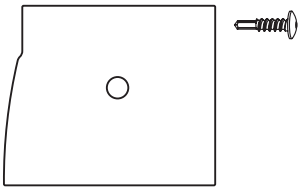

End panel FAS + screw ZSB/G

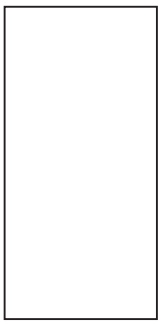

Connector plate P82

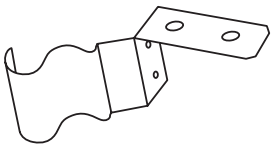

MBH

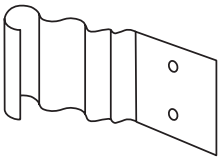

MBV

Installation brackets

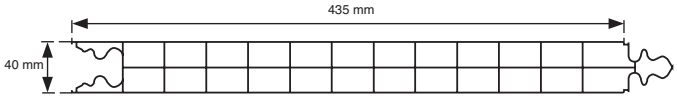

Sheet 3P

Butyl tape

Connector pin 909

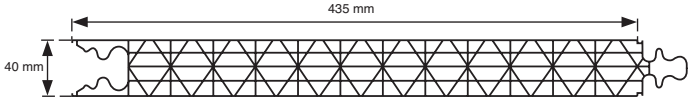

Sheet 5PX

Rubber C14

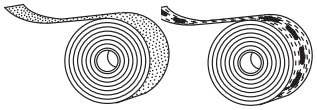

Tape BT40 - BB40

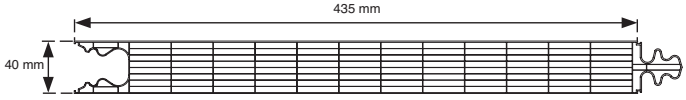

Sheet 9P

all sizes in mm

AG.PLASTICS QUALITY
info@agplastics.com
www.agplastics.com

MEASUREMENT AND PREPARATION

The sill profile is available in 3 different executions, see “parts”. The side and top profiles are identical. Measure the width B and saw the sill profile to length. For large widths, you will need several sill profiles. Take into account that a 2 mm play between the profiles is needed. Drill condensation holes of 6 mm in the depth at the front side. Repeat this every 217 mm so that the condensation holes correspond to the connection between 2 panels and the middle of each panel.

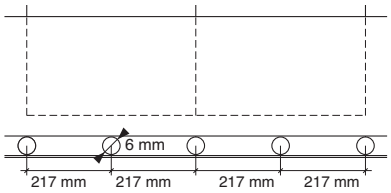

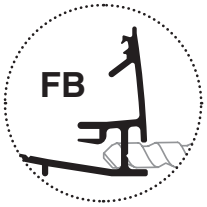

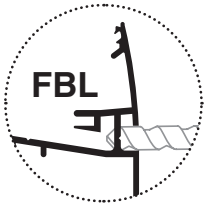

Measure the height. If the height > 2,2 m, install the horizontal support profiles with an in-between distance of maximum 2,2 m. These profiles are fixed in the surface equal to the inside of the wall, so that the wall can be fixed with the inox installation brackets (see picture 11).

Not included :
- special screws to fix the aluminium profiles on the structure
- silicone to seal the opening between the structure and the aluminium profiles on the joints
- horizontal support profiles for applications with a height H> 2,2 m

Special precautions before installation:

If the sheets have not been taped off yet or when they need to be cut, you must clean the canals with pure compressed air. After that, tape off the edges with perforated BB40 adhesive tape at the bottom and closed adhesive tape BT40 on top. This must be done with extreme accuracy. Tape off the canals of the tongue and groove as well and prevent dust of > 35 µm from entering into the canals. Make sure the tape does not come out off the edges. Otherwise the tape will still be visible after installation and will increase the risk for condensation in the sheets. Check the tape on damage before installation.

All synthetic sheets, among them the polycarbonate sheets are permeable to vapour, which is a natural phenomenon that may cause condensation in the sheets. This condensation is temporary and normal and is not a reason to reject the product. This phenomenon is less visible on opal sheets.

To meet the terms of guarantee, the tapes must be put correctly on the sheets and **the polycarbonate sheets must be sealed with silicone on the inside** over the full length of the sill profile. Make sure you use polycarbonate friendly silicone.

DETERMINE THE HEIGHT

built-in

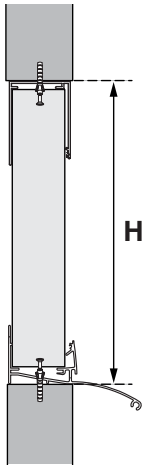

built-up

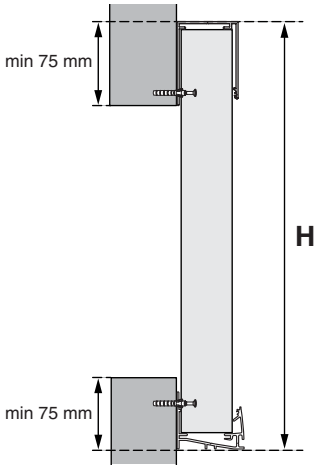

DETERMINE THE WIDTH

built-in

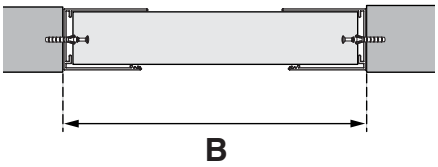

built-up

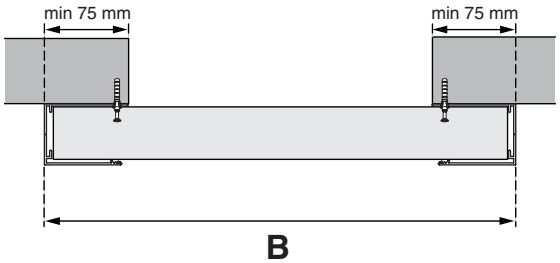

© copyright AG.Plastics 2011

POLYCLIP
AG.PLASTICS

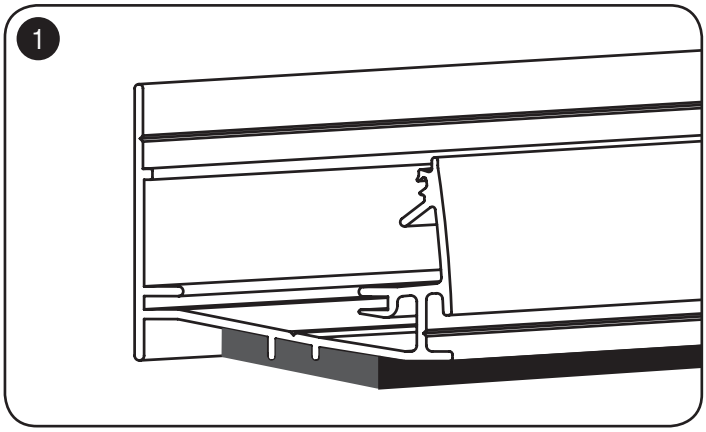

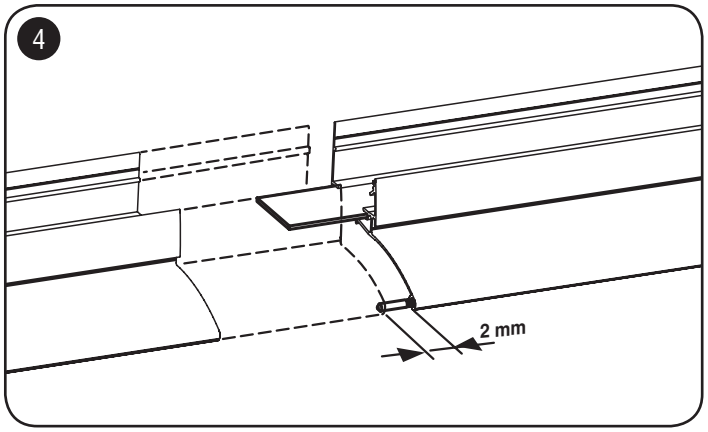

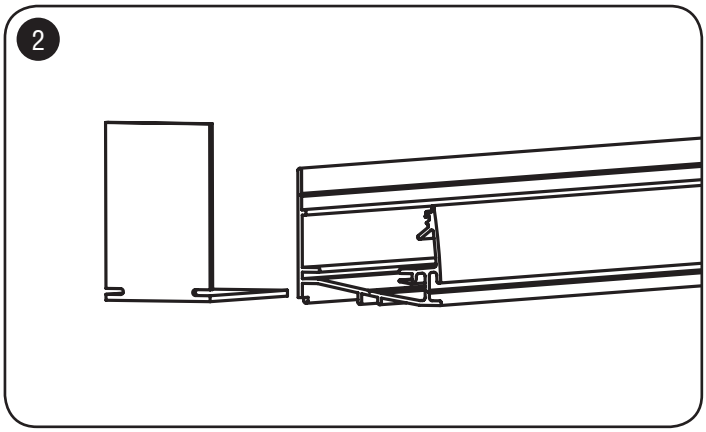

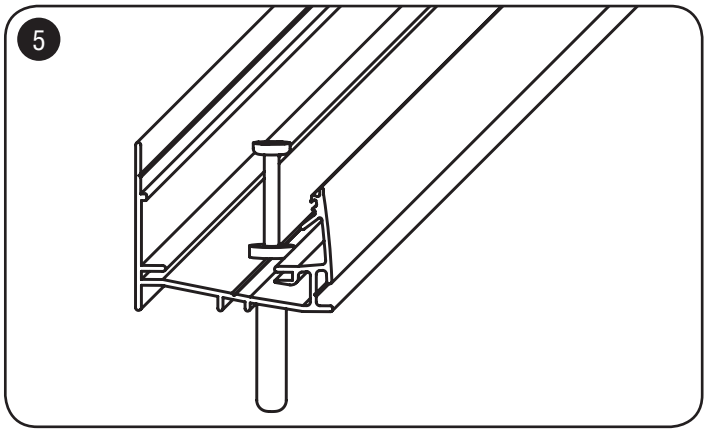

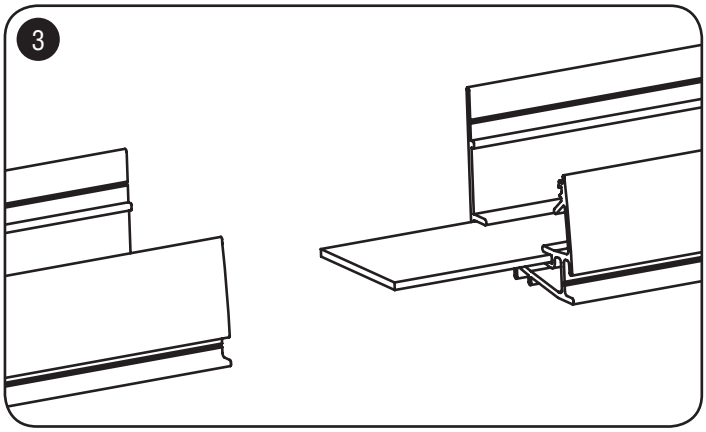

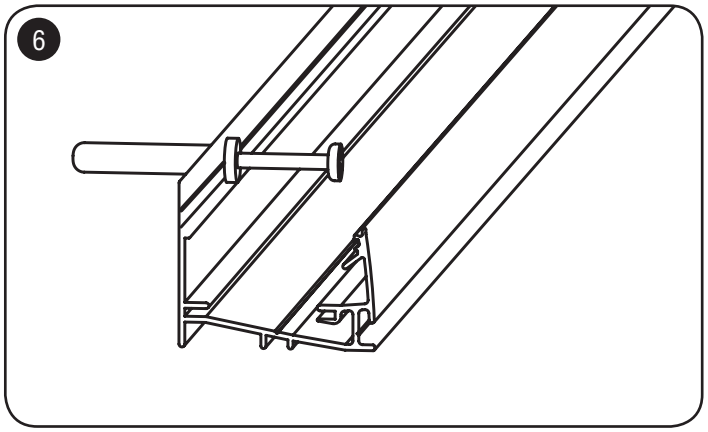

INSTALLATION

Installation of the cill profiles

❶ Make sure the underground is dust-free. Fix the butyl tape on which you install the profile.

❷ Put the 2 bottom angle connectors LB on the edges.

❸❹ Several sill profiles are fixed to each other on by using a connector plate 82. Afterwards, screw this on one side. When using a sill profile with a dripping edge (FBB), an additional connector pin (909) is used to obtain an optimal alignment of the dripping edge.
Make sure there is a 2 mm play (for dilatation) between the profiles and seal the joint with a plastic adapted silicone.

❺❻ Drill every 50 cm fixation holes through the sill profile, beginning at 20 cm from the side. Use the marker line at the bottom for installation in a wall opening (built-in) or the marker line at the back for installation against a wall (built –up). Fix the profiles with adapted fixations.

POLYCLIP
AG.PLASTICS

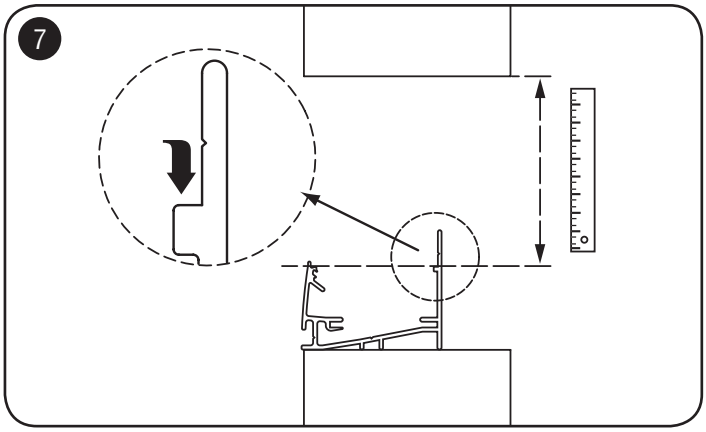

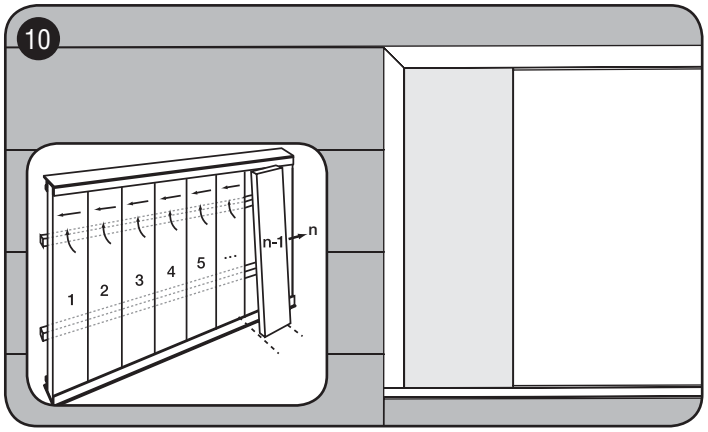

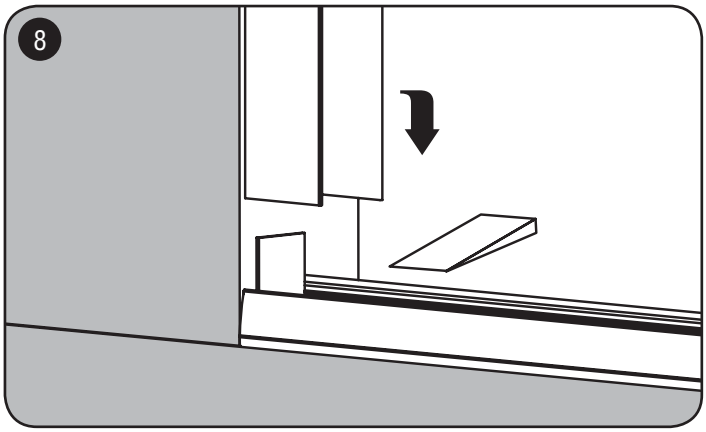

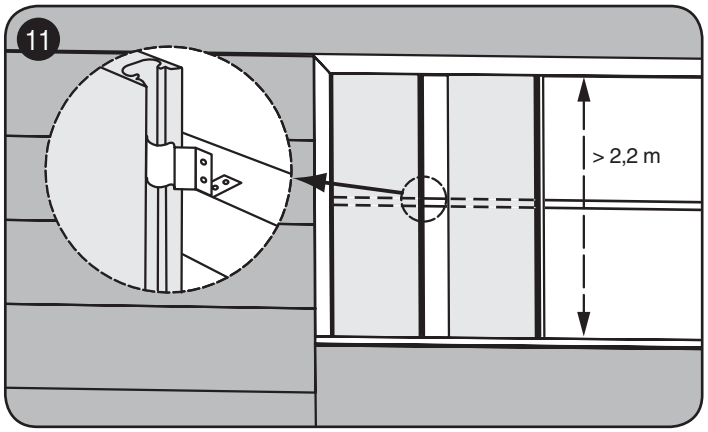

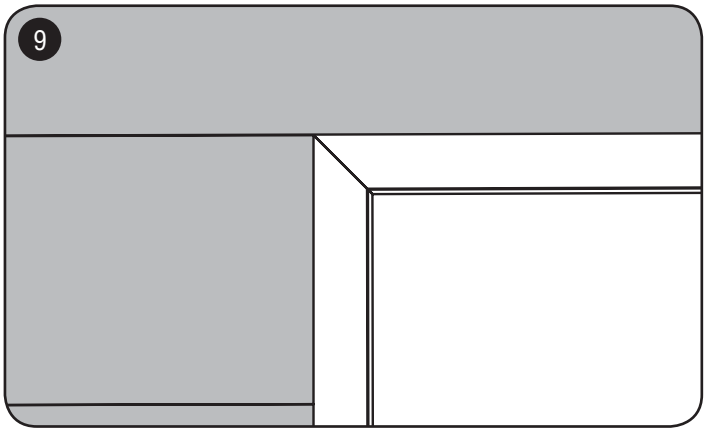

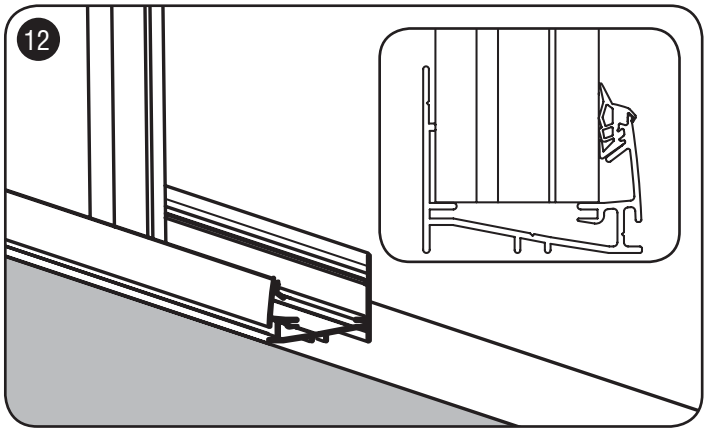

Installation of the side profiles

❼ Saw the profiles to length. Measure the height from the retain point of the sill profile to the top. The **top side** is **mitred**. The **bottom side** of the side profile is sawn **straightly**.

❽ Put the side profile on the sill profile and connect with the angle connector LB. The connecting with the angle connector can be simplified by slightly unscrewing the last screw in the sill profile and by lifting the back (with gib).
Do not forget to tighten the screw afterwards. Fix the side profiles to the wall in the same way as for the sill profile.

❾ **Installation of the top profiles**
Saw the top profile to length. The angles left and right are mitred. The fixation and the connection of the profiles mutually have to be done in the same way as for the sill profiles.

❿ **Installation of the sheets**
Make sure that the sheets are taped off with perforated BB40 adhesive tape at the bottom and closed adhesive tape BT40 on top. Cut off the tongue of the first sheet and install the sheet in the profiles. Make sure that the UV protected side of the sheet is directed to the outside (this side is marked with a sticker on the film). Always start at the left side profile. Push the sheet in the top profile and lower it in the sill profile. After this, slide the sheet against the side profile. Now you can clips the rest of the sheets into each other.

⓫ For heights > 2,2 m, 1 or more in-between rail(s) is (are) used. The polycarbonate sheets are additionally fixed with installation brackets (MBH or MBV). If 2,20 < H < 4,40 m : 1 in-between rail on half length is used; if 4,40 < H < 6,60 m: 2 in-between rails at 1/3 and 2/3 of the height are used.

⓬ During installation, it is advised to fix the rubber C14 in the side, sill and top profile. Start at the upper angle. The C14 rubber must continuously be installed on the outline. Before installing the second last sheet, you need to measure the horizontal distance from the sheet to the retain point in the side profile. This distance is diminished by 480 mm, which is the useful width of the last sheet (length without tongue). Saw the last sheet to the correct width and tape off on top and at the bottom. First, fix the last sheet. Use a strong and thin ribbon on top and at the bottom at one side of the sheet and slide the last sheet and the ribbons towards the retain point of the side profile. Install the second last sheet and clips it at the same time in the sheet before this one. Now you can clips the last sheet in the second last one by using the ribbons. Fix now the rubber in the side profile. For installations in front of the wall opening (built-up), the opening holes on the sill profile are closed with FAS sealing plates. To do this, you must use the self drilling screws ZSB/G, which are fixed in the angle connector LB.
The sheets must be sealed with silicone on the inside over the full length of the sill profile. Make sure you use polycarbonate friendly silicone.

© copyright AG.Plastics 2011

AG.PLASTICS QUALITY
info@agplastics.com
www.agplastics.com